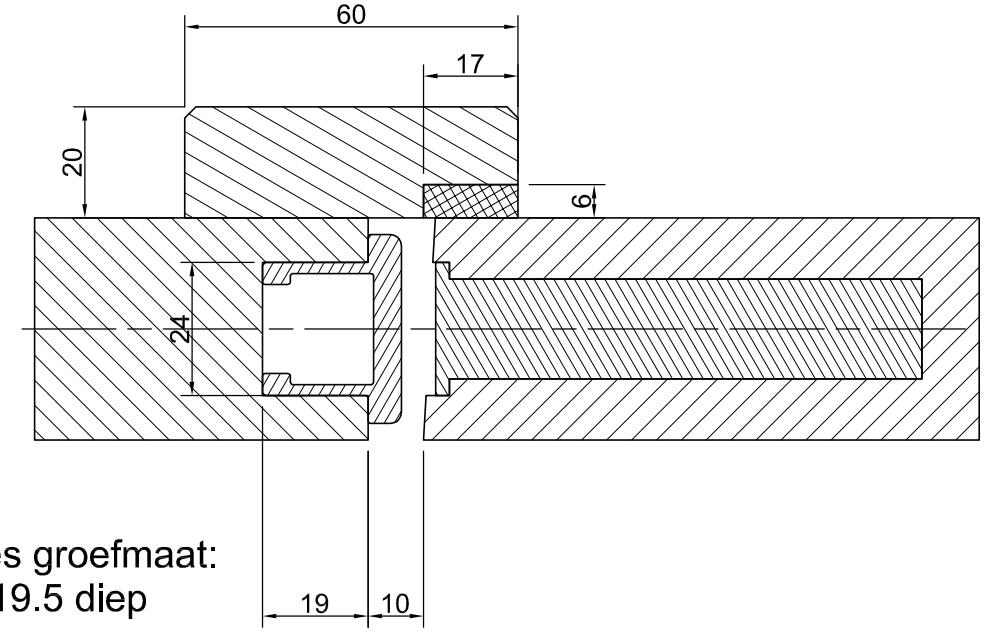

Advies groefmaat:
25 x 19.5 diep

C-C (1 : 1)

Actieve deur

Passieve deur

Threatment		Units	MM	Roughness	Unspecified tolerances	According NEN-ISO 1101
Afterthreatment		Not on scale bases	25	3.2	Dim ± 0,5 Angle ± 0,5°	
Layer thickness		Reference	(25)			
Description:	Detail 40mm			Scale 1:1	Engineer: TM	Checked by:
					Date: 25-1-2007	Date:
Project:	Multipoint De Luxe / Light inbouw				Revision 00	Project number:
Profit Tools	Postbus 151 3400 AD IJsselstein, Holland Telephone : 0031 - (0)30 - 6877940 Fax : 0031 - (0)30 - 6875688 E-Mail : HMB@HMBProfittools.nl			Projection	Sheetsize A3	Drawing number 007001

THIS DRAWING REMAINS PROPERTY OF HMB PROFIT TOOLS AND MAY NOT BE COPIED WITHOUT OUR WRITTEN CONSENT.